Extreme Low Light

WAT-910HX MBD

Watec®

Extremely low Light
Miniature B/W Camera

QUICK SPEC

1. 0.00009LUX
2. 570TVL
3. OSD- fully adjustable
4. 2D and 3D Noise Reduction
5. Conical Pinhole3.3mm or Glass 3.
6. BLC/HLC/IR-Optimizer
7. DIMS: 23mm X 23mm
8. M12, 0.5mm lens options
9. 12VDC +/-10%

DIMENSIONS P3.7

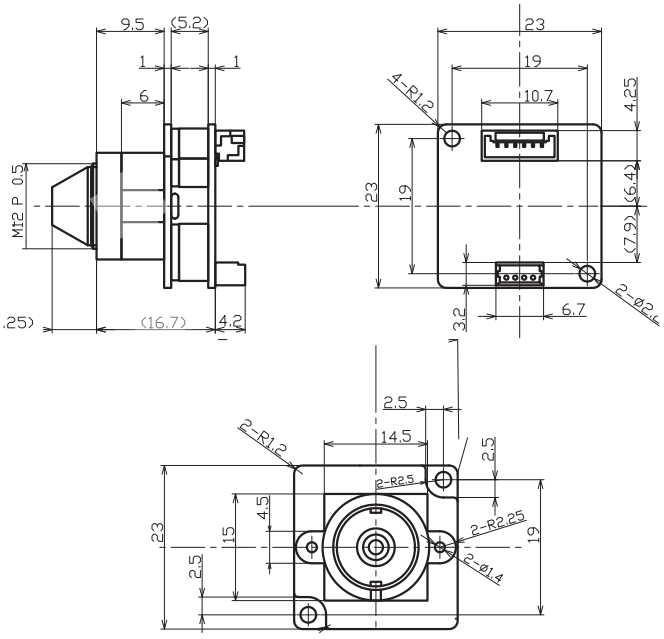

DIMENSIONS G3.8

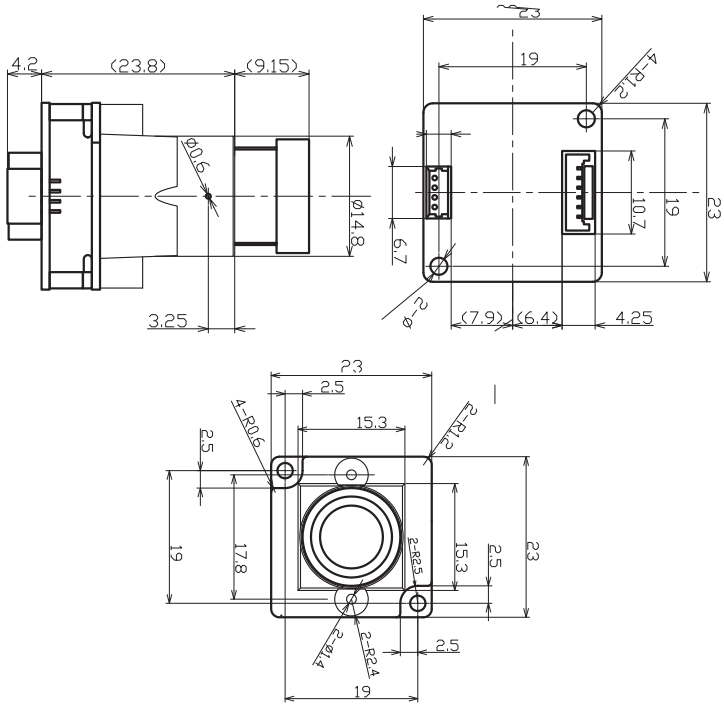

wateccameras.com
Watec
888-567-4294

Distributed By:

As low as: $